Parts Identification:

A) 1 - Telescoping hoop assemblies with attached plastic vertical upright support brackets
B) 2 - 9" Upright extension tubes
C) 2 - Screws

Note: *If you find that you are missing any of the parts identified above, or have any questions, please call our Service Helpline - 800 428-8560.*

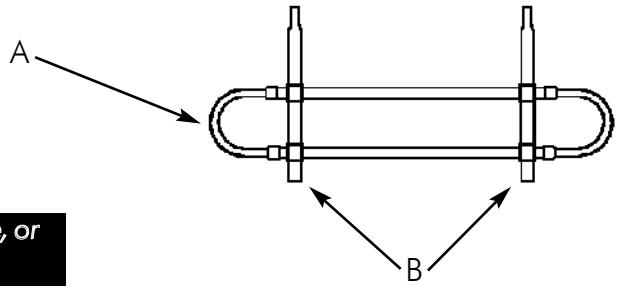

Step 1 Completely assemble Model 10 Pet Barrier according to instructions provided with barrier.

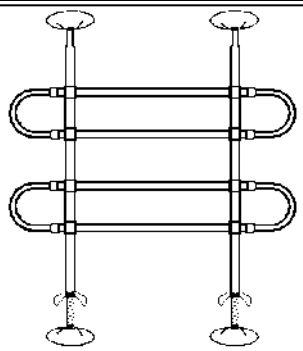

Step 2 Remove the 2 Support Feet from the top of assembled barrier.

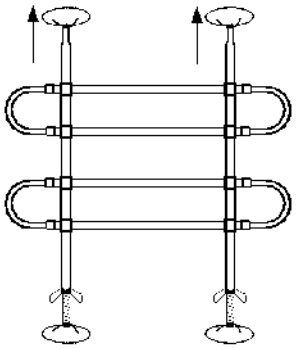

Step 3 Insert the upright extension tubes into the two ends.

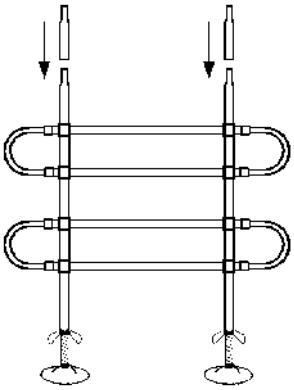

Step 4 Add extra telescoping hoop assembly to upright tube (not necessary if adding extension to increase height only.)

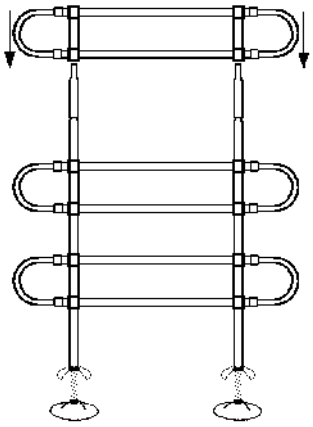

Step 5 Insert the 2 Support Feet back into the top of the barrier.

Step 6 To properly fit barrier in vehicle, follow steps 6, 7 and 8 of the instruction sheet provided with the Model 10 Pet Barrier.

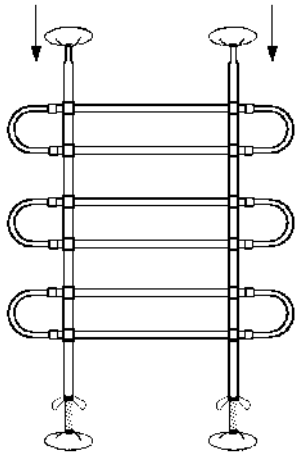

LIMITED WARRANTY

1. For one (1) year from the date of original purchase, MIDWEST Homes For Pets ("MIDWEST") warrants to the purchaser of this pet barrier that, should it prove defective by reason of improper workmanship and/or material, MIDWEST will repair or replace, at its option, any defective part of the barrier, without charge for the part or for shipping. Replacement parts are warranted for the remainder of the original period.

2. **THIS WARRANTY DOES NOT COVER** defects caused by any animal, any physical abuse to or misuse of the barrier, negligence, improper installation or overloading, damage to persons, cargo or vehicle, defects caused by improper or illegal vehicle operation or accidents, any damage caused by the original purchaser or any third party, or any defects arising or discovered more than one (1) year from the original retail purchase date.

3. **STEPS TO OBTAIN WARRANTY SERVICE:**
   - A. The purchaser must call MIDWEST's HELPLINE, 800-428-8560, to report the alleged defect to a customer service representative or obtain missing parts.
   - B. The customer service representative will determine if the defect is covered by this warranty, and if it is, will authorize and instruct the purchaser in how to obtain corrective action.
   - C. MIDWEST may require the purchaser to present the sales receipt or other proof of purchase prior to authorizing any return or replacement. No returns or replacements will be permitted without proper authorization. If a return or replacement is authorized, you may be requested to return the item to MIDWEST or to make the item available for pick-up by MIDWEST.

4. **ANY EXPRESS WARRANTY NOT PROVIDED IN THIS WARRANTY DOCUMENT, AND ANY REMEDY FOR BREACH OF CONTRACT THAT, BUT FOR THIS PROVISION, MIGHT ARISE BY IMPLICATION OR OPERATION OF LAW, IS HEREBY EXCLUDED AND DISCLAIMED. THE IMPLIED WARRANTIES OF MERCHANTABILITY AND OF FITNESS FOR ANY PARTICULAR PURPOSE ARE EXPRESSLY LIMITED TO A TERM OF ONE (1) YEAR.**

SOME STATES DO NOT ALLOW LIMITATIONS ON HOW LONG AN IMPLIED WARRANTY LASTS, SO THE ABOVE LIMITATIONS MAY NOT APPLY TO YOU.

5. **UNDER NO CIRCUMSTANCES SHALL MIDWEST BE LIABLE TO PURCHASER OR ANY OTHER PERSON OR ANY SPECIAL, INCIDENTAL OR CONSEQUENTIAL DAMAGES, WHETHER ARISING OUT OF BREACH OF WARRANTY, BREACH OF CONTRACT OR OTHERWISE, SOME STATES DO NOT ALLOW THE EXCLUSION OR LIMITATIONS OF INCIDENTAL OR CONSEQUENTIAL DAMAGES, SO THE ABOVE LIMITATIONS OR EXCLUSION MAY NOT APPLY TO YOU.**

6. This warranty gives you specific legal rights, and you may also have other rights which vary from state to state.

Warning: *This product is not to be used as a cargo barrier.*
Remove collars and tags from pet to prevent possible entanglement.

MIDWEST
HOMES FOR PETS
P.O. BOX 1031 MUNCIE, IN 47308
www.midwesthomes4pets.com